VHFER

LEARN BY DOING

50 MC. AND UP

Volume 5, No. 6 Nov. - Dec., 1967

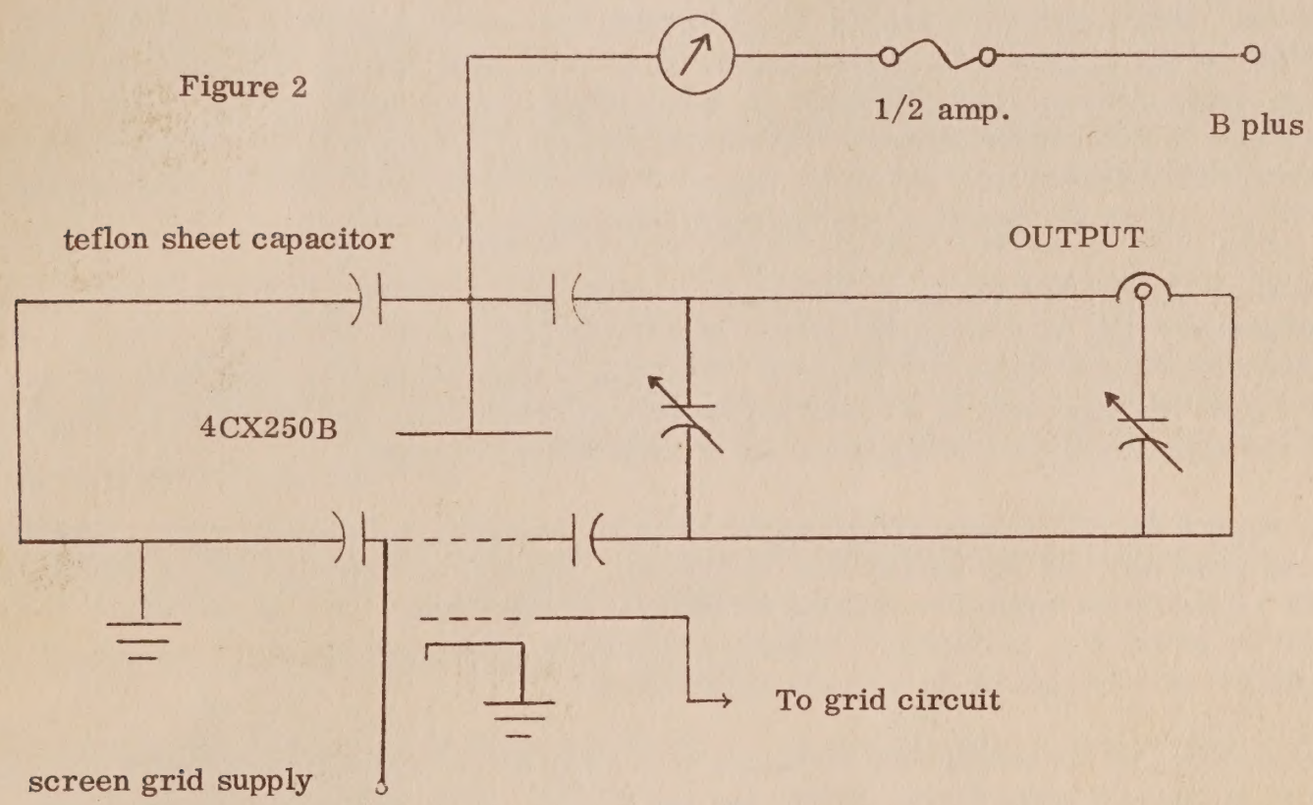

Figure 2

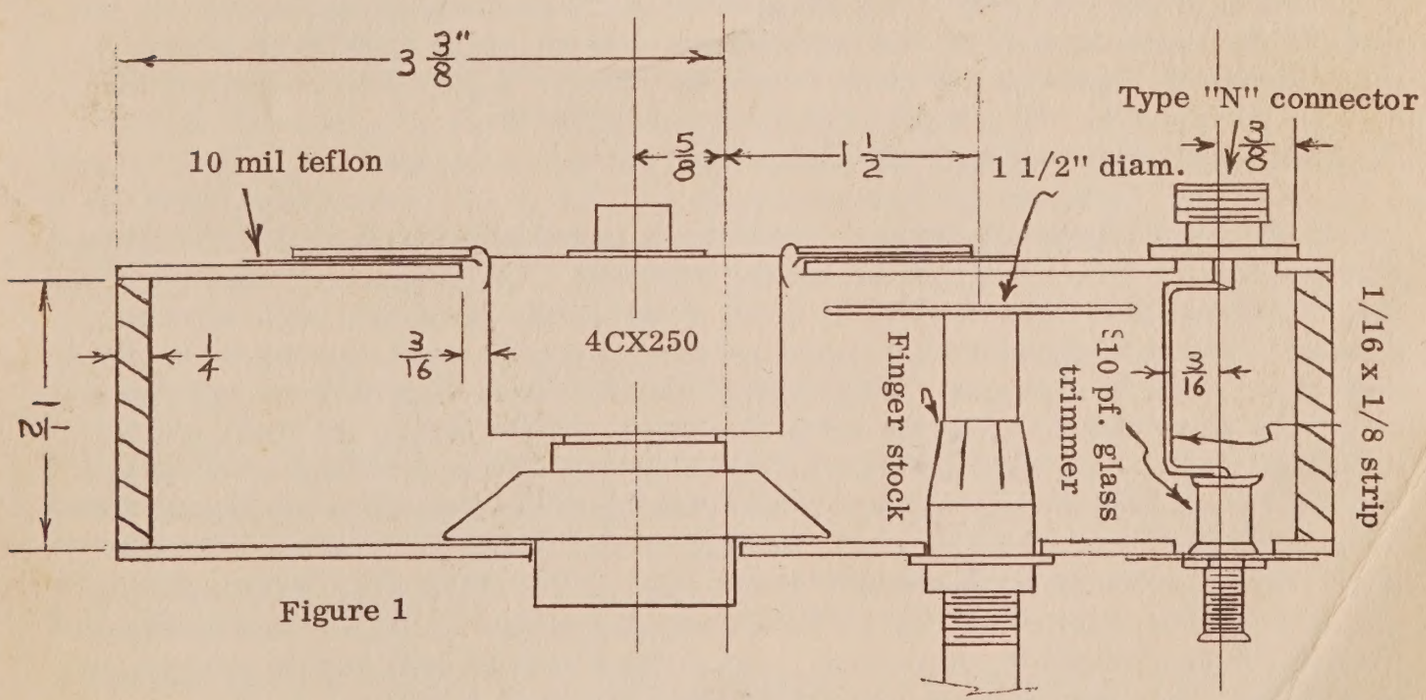

Figure 1

HIGH EFFICIENCY 432 PLATE CIRCUIT

MEASURING NOISE FIGURE--ACCURATELY

by Peter Laakmann, WB6IOM*

With the advent of amateur radio systems incorporating antennas that look at cold sky, low-noise front end design has taken on a new meaning. While in conventional over-the-horizon systems a receiver noise figure of 2 db is considered excellent and not worth improving on, systems that look at cold sky can be improved much more than 2 db by a better front end.

For example, if you now have a front end with a noise figure of 3 db and you reduce its noise figure to 1 db you can realize as much as a 6 db S/N increase with a zero noise antenna. With a parabolic antenna at microwave frequencies and low feedline loss you should realize at least 4 db improvement. It is easily seen that small changes in receiver noise figure can pay large dividends in, for example, moonbounce systems. However, the object of this article is not to discuss the sources of microwave system noise but the measurement of relatively low noise figures with simple amateur means. Most standard handbooks cover the aspect of system noise calculation well enough.

The usual excess thermal noise generator (diodes, lamps, tubes) produce a noise output that is never less than that of a resistor at 300 degrees Kelvin. When measuring a system with a noise temperature of 75 degrees (typical of a good parametric amplifier) the noise input from the generator is so much larger that any noise from the amplifier is lost in inaccuracies due to gain changes and the random nature of noise.

The system described here makes use of a cooled termination (liquid nitrogen), a weak signal generator and any type of a.c. voltmeter. Any type of amplifier can be measured, even a parametric amplifier, without an isolator or circulator. The measurement is as accurate as the a.c. voltmeter's relative calibration. Gain changes of the system or bandwidth of the receiver do not have to be known.

The principle of the cooled-load technique is to compare the system noise output between a load at ambient temperature (300°K) and one at 77°K. With a noiseless front end the output noise should drop 6 db. This basic technique is rendered almost useless by the fact that the impedances of the two terminations used are never exactly the same. A slight change in impedance can cause very large changes in gain that can destroy all chances of accuracy. This is particularly true of tunnel diode or parametric amplifiers but it also applies to most transistor front ends.

The author's contribution to the basic substitution technique is the insertion of a weak signal source in series with both the hot and cold load. This signal is constant and provides a convenient monitor of gain, or a way of measuring signal plus noise to noise directly. The weak signal source is coupled through a very small capacity to the inner conductor of the 50-ohm line. The coupling reactance is so large that the impedance of the load is not affected. By the usual Thevenin's transformation the signal can be thought of to originate from a voltage source in series with the termination. If the impedance of both terminations is close to 50 ohms the voltage source is practically the same for both loads. Even if the two terminations differ by 10% from each other the maximum noise voltage error can not exceed 10%. It is a relatively easy matter to measure vswr or reflected power for most amateurs so that finding two terminations close to 50 ohms should be no problem. Not all terminations work well in nitrogen so be sure you check the reflected power when the termination is cold.

*8001 Airlane Avenue, Los Angeles, Calif. 90045

The weak signal adapter is constructed from an "N" straight adapter or whatever fits your amplifier. A small hole is drilled in the center to accept the center pin of a chassis type "BNC" with some clearance. The pin should just slightly protrude to the inside. The threaded portion of the BNC is then soldered to the outside of the adapter. The cable going into the nitrogen should be as short as possible as any part not covered by nitrogen produces noise at a higher temperature. RG/58 or its teflon counterpart is about as large a size as can be used without boiling of the nitrogen at too rapid a rate. With a full bottle the set-up is good for about 2 hours of measurements. With no attenuator cable inserted, the liquid will boil off at about 3 inches per day, so two bottles are good for a weekend of measurements. When storing the liquid nitrogen, be SURE to drill a small hole in the cover of the container to let the gas escape.

MEASURING PROCEDURE:

1. Check the impedances of both terminations through the test adapter. They should both be as close to 50 ohms as possible.

2. Connect the 300°K load and tune in the weak signal source. Adjust the weak signal source level for a S/N ratio of 10 (20 db) if the dynamic range of your receiver allows. At a 20 db S/N ratio the noise adds only 1% to the rms signal level so it can be neglected. If you have to work with a lower S/N ratio this can, of course, be taken into account. Use the largest possible bandwidth and make sure that your receiver is not overloading or is on AGC. Record the signal level output and the noise level output (tune away from signal or turn the signal off.)

3. Connect the cold load and adjust the receiver RF gain for the same pilot signal reading on the voltmeter. Read the noise level.

4. Repeat steps 2 and 3 and average the readings.

5. Compute the receiver input noise temperature. Note that noise temperatures, contrary to noise figures, add up.

$$\left(\frac{V_n\ (300)}{V_n\ (77)}\right)^2 = \frac{300 + T_r}{77 + T_r}$$

The left side is the noise power ratio at the output of the receiver, while the right side is the temperature ratio. T_r is the noise temperature of the receiver. You may convert the noise temperature to noi se figure by remembering that noise figures are given relative to a 300°K source.

$$\text{NF (db)} = 10 \log \frac{300 + T_r}{300}$$

Editor's Note: I called a distributor of liquefied gases to see about the price of small quantities of liquid nitrogen and found it is about $2 a liter (quart). But the catch is that you need to rent a container for about $2 a day. An ordinary vacuum thermos is a hazard. A good part of the nitrogen will be used cooling down the container. So it looks like you should be prepared to spend about $6 or so.

A contrary opinion is given by the author who says that ordinary wide-mouth thermos bottles are used in the aircraft plant where he works and that there is no trouble and that the liquid nitrogen is not as dangerous as most people think. Don't put your finger in it but if you should spill some it rapidly boils away. You MUST put a hole in the lid of your thermos to let the gas escape or you will have an explosion in short order, just as you would if you filled a bottle with water, stoppered it and then heated it.

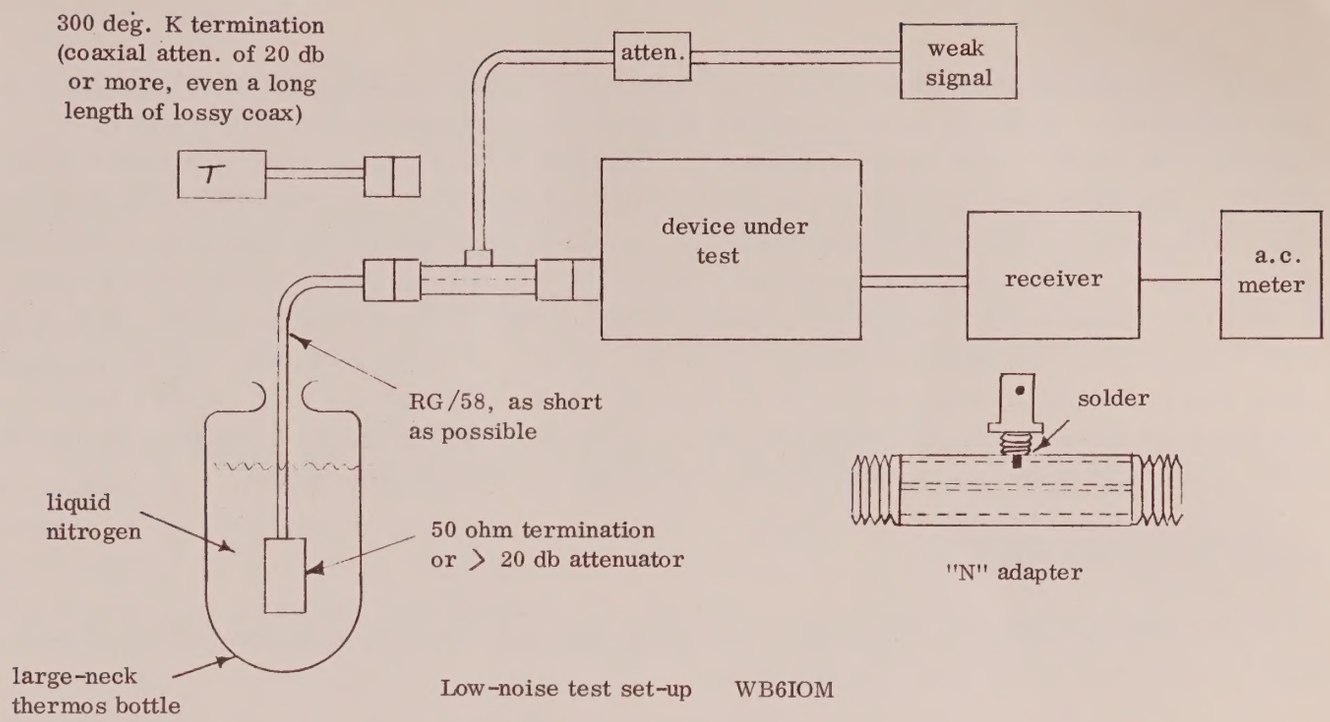

Low-noise test set-up WB6IOM

THIS IS THE LAST ISSUE OF VHFER

In the last issue we mentioned our problems of continuing VHFER. Primarily it was a matter of requiring more time than I could spend because of our growing medical electronics business and also because we couldn't get articles. Jim Fisk, a well-known VHF man is editing a new ham magazine from New Hampshire. He has agreed to take over the VHFER subscription list and send you his new magazine (not strictly VHF) until your VHFER subscription expires. Anyone who wants his money back instead, clip the address label from your last VHFER and send it to us for a refund. I realize the expiration dates on many magazines are confusing because we changed the coding when we changed from monthly to every other month, and again when the rate was changed. We have not accepted subscriptions for the past month or so. All those who sent in money will get their checks back or a refund.

I want to thank all of our subscribers for their support of VHFER. It is not for lack of subscriber interest that we are stopping. We think we did quite well in building and maintaining a good subscription list considering the technical nature of the mag.

We will still be selling converters, though they will not be pushed. Probably new designs will come along during the lulls in business. There was no advertisement in this issue because of lack of space.

For late VHF information and skeds you can check into or listen to either of two VHF nets on Sun eve. One is at abt. 10 PM CST and another at 9 PM PST. Both on about 3810 kc.

NOTE: The notice below is required of all second class mailers. But do not be misinformed. This is the last issue of VHFER. We are discontinuing publication.

VHFER magazine is published every other month by Parks Electronics Lab., 419 S.W. First, Beaverton, Ore. 97005. Subscription rates: U.S. & Possessions, $1.50 per year. Canada & Mexico, $1.75 per year. Other countries, $2 per year. Second class postage paid at Beaverton, Oregon 97005.

W6GD ANTENNA NOTES
continued from last issue

Fig. 5 EIGHT ELEMENT ARRAY USING EXTENDED DIMENSIONS

11 db Gain

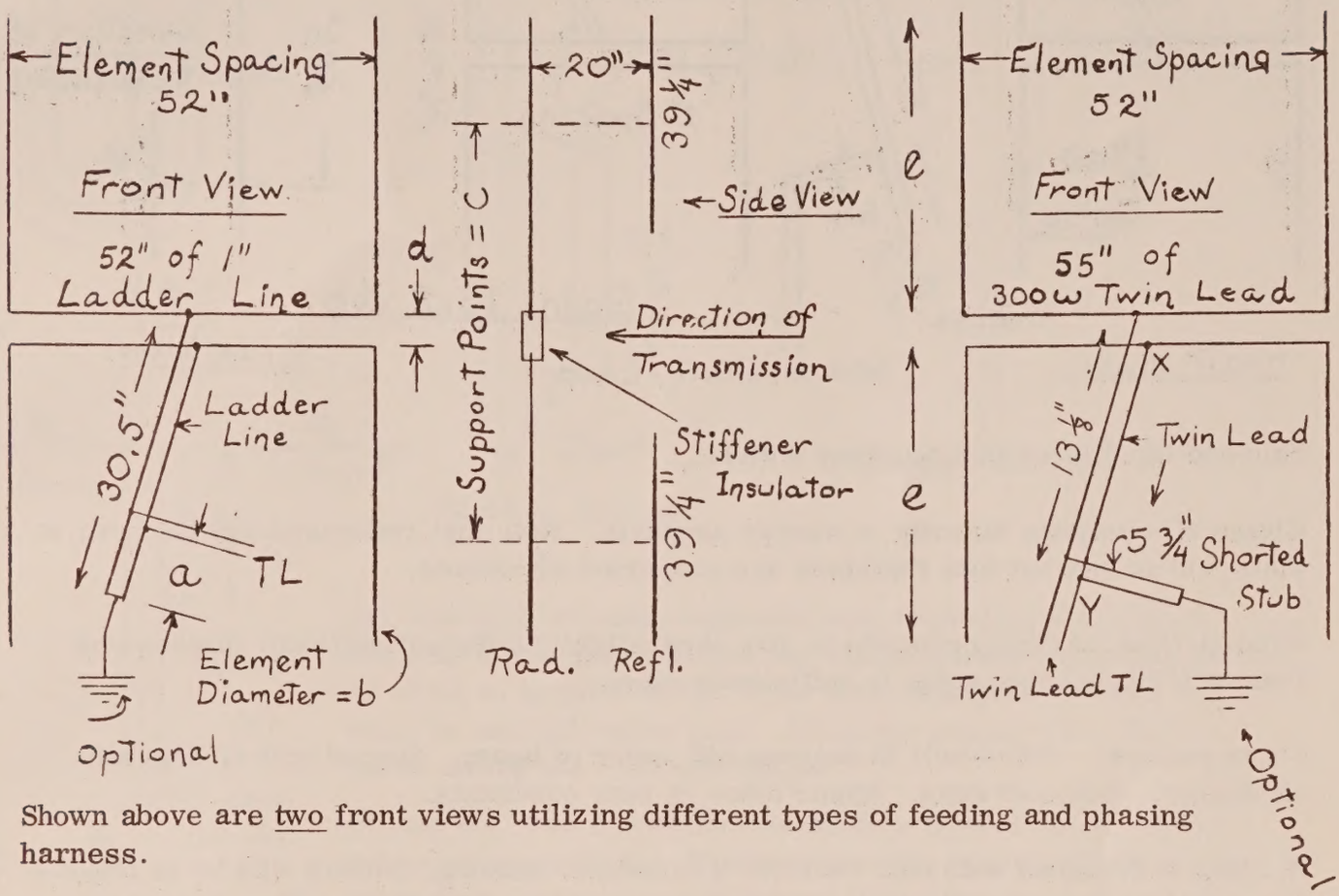

Shown above are two front views utilizing different types of feeding and phasing harness.

Clamp all elements directly to wooden supports; reflectors at their mid points and radiators off-center. With 1" ladder line, or twin-lead harness, use 1" end-to-end radiator spacing and 57 1/2" between support points. When 2" line is used for harness, space radiators to 2" apart, end-to-end, and use 58 1/2" between support points. A slight twist at center point to permit a practicable take-off for the line at each end. The dimensions shown below for 1" ladder line also hold for #12 wire spaced 2". Both have impedance of 470 ohms.

This array has one db less gain than a 16 element array with conventional lengths and spacings. Gain of latter is 12db, not 14 db, as claimed. Polar pattern as follows: First null 51 degrees off center of beam. Next lobe off end, but fairly weak. Minor lobes in rear quadrants.

Plastic line stiffeners were used at X and Y in twin-lead harness. If they are not used a slightly different SWR may result.

a				b	c	d	e
150Ω	200Ω	300Ω	470Ω				
3 1/4	4 1/4	5 3/8	6 3/4	1/4	58 1/2	2	48
3 1/4	4 1/4	5 3/8	6 3/4	1/4	57 1/2	1	48
		5 1/2	6 1/4	3/8	57	2	46

All Dimensions in inches.

Fig. 6 16 ELEMENT RECTANGULAR ARRAY WITH EXTENDED DIMENSIONS

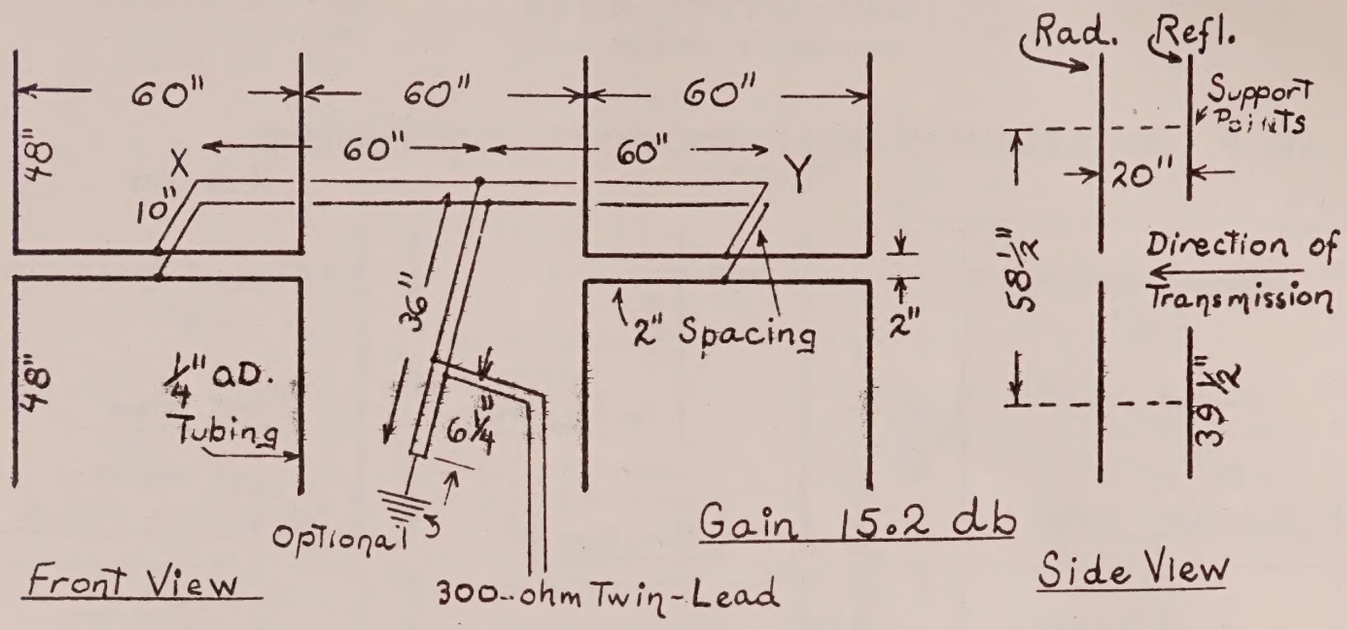

Stub and tap dimensions courtesy W6EJL.

Clamp all elements directly to wooden supports. Note that reflectors are clamped at their mid-points but that radiators are supported off-center.

Precise antenna tuning procedure may show slightly different reflector dimensions than 39 1/2", but this value is sufficiently close.

Polar pattern: First null 19 degrees off center of beam. Second null 42 degrees off center. Nulls off ends. Minor lobes in rear quadrants.

If array is designed with half wave (40") broadside spacing, pattern will be as follows: First null 30 degrees off center of beam. Second lobe 48 degrees off center. Nulls off ends. Minor lobes in rear quadrants.

Method of feeding latter type same as shown above except that dimension X-Y will be 80" instead of 120". Stub and tap dimensions will be entirely different than those shown above and must be determined by procedure outlined in these notes. Use 470 ohm phasing lines.

The center impedance of these extended dimension arrays is usually reactive; hence it is impossible to attempt impedance matching by varying the phasing line spacing. The type of stub shown above is the most practicable for this general type of impedance matching.

The first nulls in these arrays are extremely deep and sharp and provide an excellent method of cutting out QRM.

Note: For all these rotating antennas use half or full wave sections of flat 300 ohm twin-lead between the antenna and the main line, for the flexible section. Don't allow them to touch the pole. Use a good brand of twin-lead. Do not use perforated twin-lead for this purpose as it deforms easily. Be sure to allow for the proper VP of the twin lead.

The MICROWAVE DIRECTORY of hams in Calif. & in Seattle is available from K6KBE at 492 Lomer Way, Milpitas, Calif. 95035. There are about 25 hams on the present list with more being added. This is a Xeroxd list so please don't write for it unless really interested. It is free.

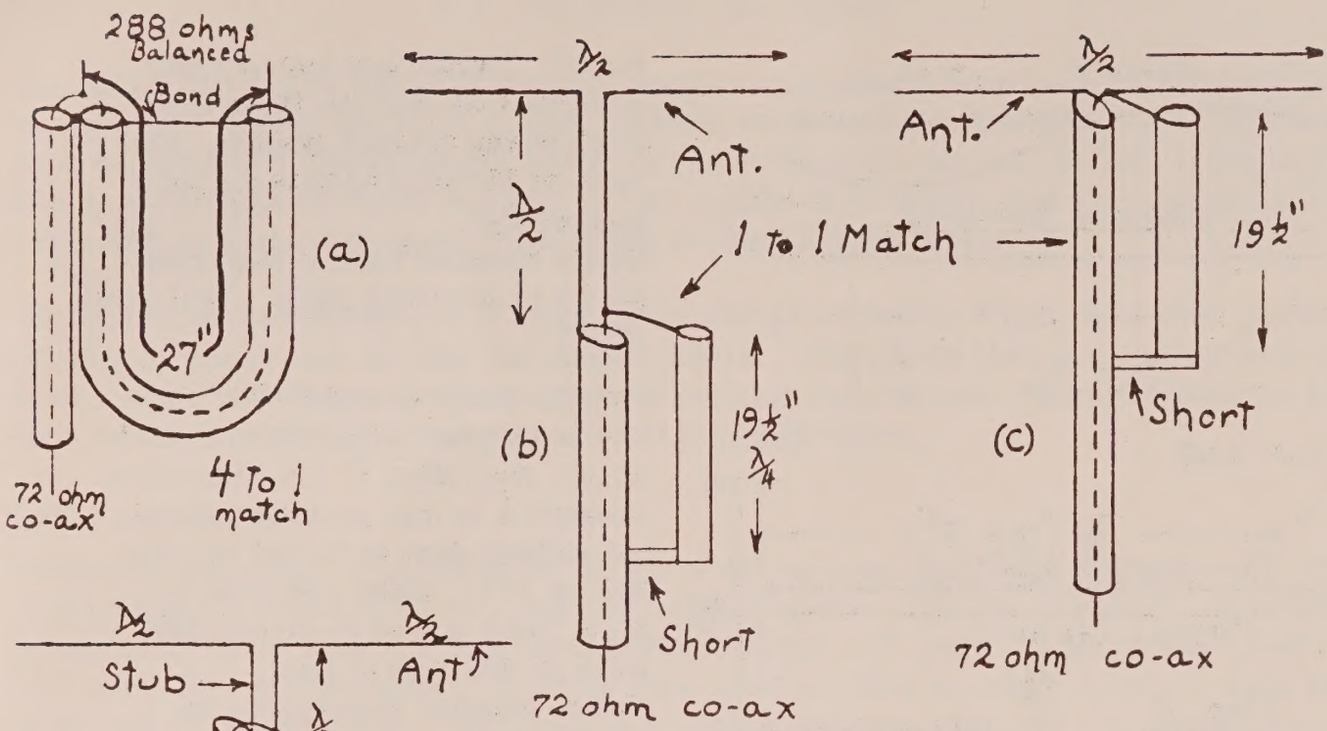

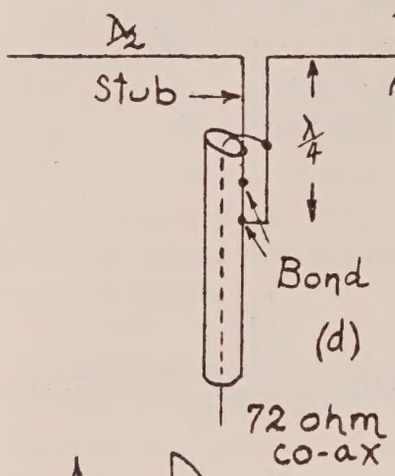

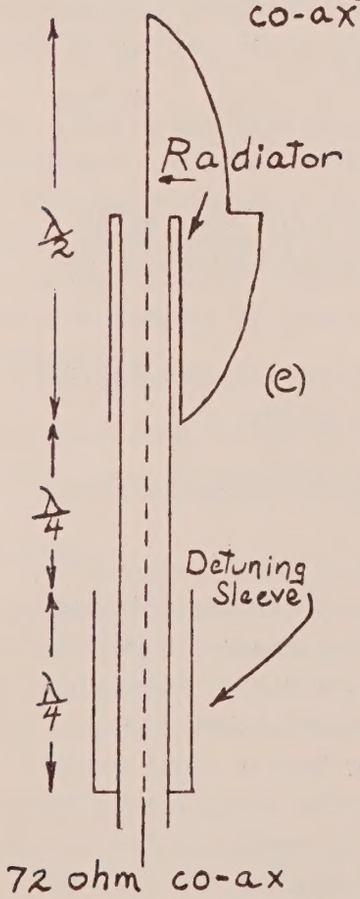

(a) Use with 300 ohm balanced load, including a J antenna. Steps up impedance 4 times and changes from unbalance at 72 ohms to balance at 288 ohms (essentially 300). The loop must be one half wave long. Allow for proper VP. Will cover entire 144 - 148 mc range.

(b) and (c) Two adaptations of another type of balun, actually a decoupling section. The quarter wave bar should be about same O.D. as co-ax, and spaced 1" to 2" on centers. Too close spacing reduces impedance and effectiveness. Another form is a co-axial sleeve about 3 to 4 times the O.D. of the co-ax. See (e). This type has only a 1 to 1 transformation ratio.

(d) (From G.V. Dale) This arrangement permits matching a 72 ohm co-ax to a balanced full wave (or extended full wave) antenna, providing the stub is the correct length for the antenna used. Tap the center conductor on the stub at the 72 ohm point. Bond the outer conductor securely to the stub at two or more places, as shown. This arrangement may be used on any antenna utilizing this type of stub, including the "J".

(e) Co-axial antenna with detuning sleeve. This sleeve decouples the outside of the line from the antenna. Indiscriminate arrangement of the line below this point may still permit direct radiation from the antenna into the line.

* * * * *

Use twin-lead sparingly for VHF, particularly where the line lengths are appreciable. The loss is relatively large, and rain causes a definite impedance change. One inch to two inch line has definite advantages, if carefully used.

Fig 8 METHOD OF TERMINATING A BALANCED LINE TO ANY BALANCED LOAD

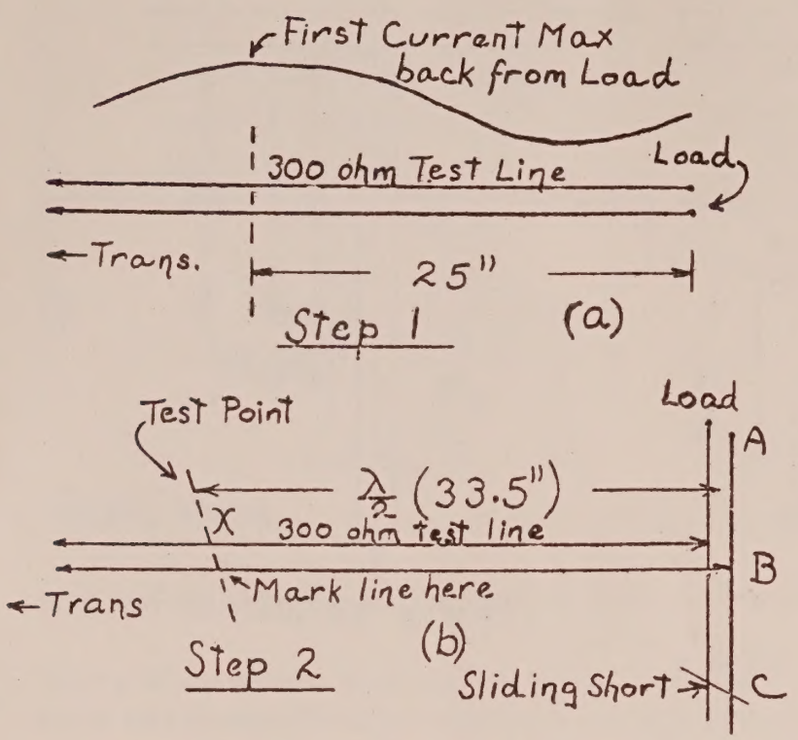

Step 1. Locate first current max point back on test line from feed point on any antenna system. The value of 25" used here is for example only.
Divide distance back to first max by VP of twin-lead (82%). This gives 30.5".

Step 2. Make up a stub A-C of ladder line (or larger wire) equal to 30.5", plus about 4" for adjustment. Connect A to load point on antenna; put sliding short at C; and tap test line on at B. Mark test point X, 33.5" from B (one electrical half wave on this type of line).
Follow detailed instructions in Section 9.

Fig. 9 STANDING WAVE INDICATORS

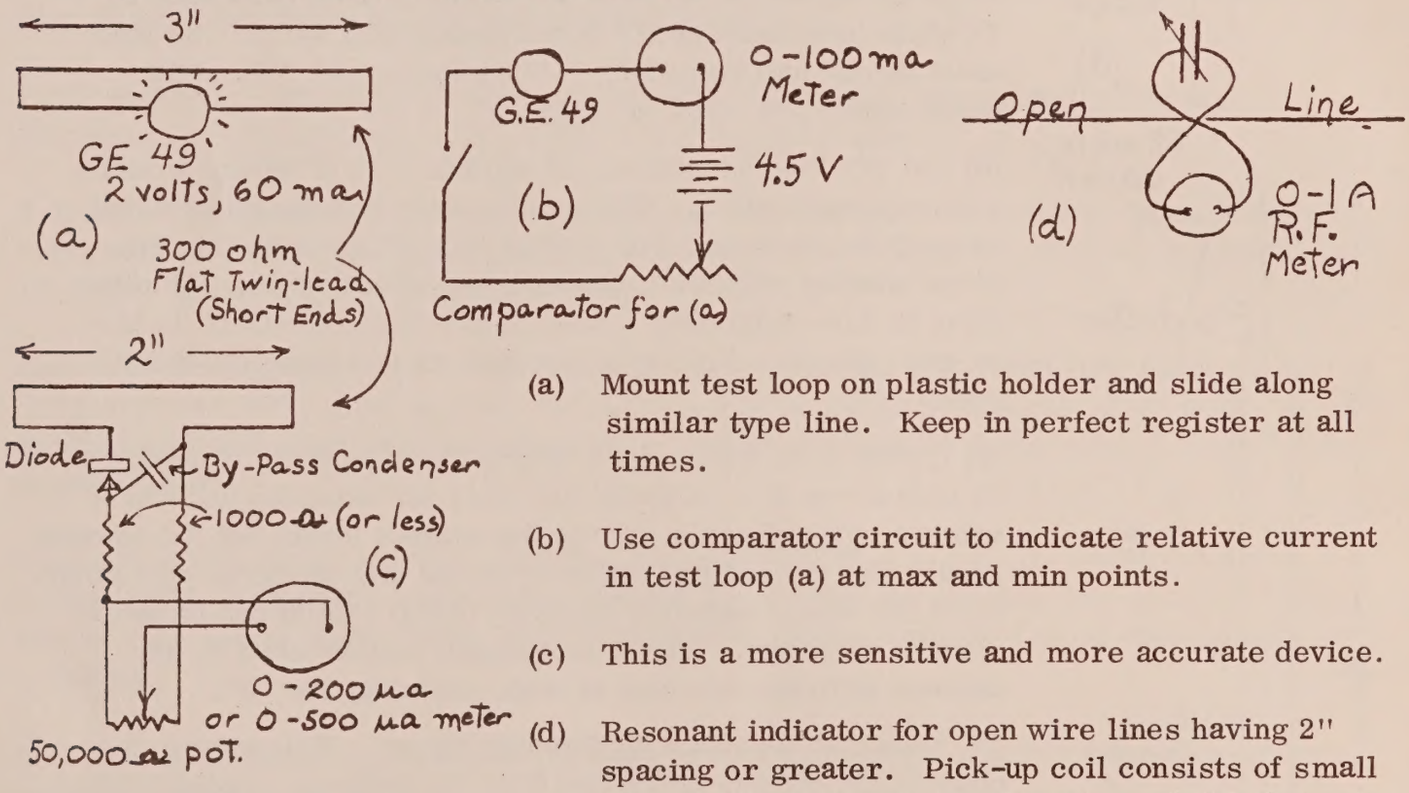

(a) Mount test loop on plastic holder and slide along similar type line. Keep in perfect register at all times.

(b) Use comparator circuit to indicate relative current in test loop (a) at max and min points.

(c) This is a more sensitive and more accurate device.

(d) Resonant indicator for open wire lines having 2" spacing or greater. Pick-up coil consists of small "figure 8" inductance (as shown) coupled to but not touching one wire of the line at a time. Resonate circuit (detune slightly if too much reading is obtained). Keep plane of pick-up loop at right angles to plane of two wires of line. This device will read current standing wave in each wire independently. Mount device in small plastic frame with slides or small wooden wheels and move along one wire at a time. Each loop of the "figure 8" inductance should not be over 3/4" in diameter. Use more turns in each half of "figure 8" for lower frequencies.

This completes the W6GD Antenna Notes series by the late Oliver Wright. Unfortunately, the modifications and additions promised did not arrive by our printing date.

A HIGH-EFFICIENCY PLATE CIRCUIT FOR 432 MEGACYCLES

H.E. Holshouser, Jr. K4QIF*

The 4X250 and 4X150 series of esternal anode tubes have become quite popular for use at 432 megacycles. Often, the most serious problem encountered in the design and construction of such amplifiers is the efficient transfer of power from the plate of the tube to the load. Coupling to a conventional tuned line type circuit can be quite tricky, and when measurements are made with reliable equipment, results can be quite disappointing.

The circuit to be described is a radial development of quarter-wave stubs with simple capacitive tuning across the high impedance points. There have been some compromises made in the design for the sake of simplicity and ease of construction. However, judging from the final evaluation, there is little degradation in performance.

Cavity Construction

Basically, the cavity is constructed from a brass or copper cylinder with an inside diameter of 6 1/4" and a length of 1 1/2", and two flat side-plates of brass or copper. It is advisable to use material at least 1/8 inch thick and preferably 1/4" thick for the cylinder and material 1/8" thick for the side walls. Extreme care must be taken to insure a tight fit between cylinder and the cavity walls. This joint is at a high current point, and a sloppy fit would degrade efficiency. It would be a good investment to have the ends of the cylinder milled flat at a machine shop. The walls are secured to the cylinder by use of a liberal amount of machine screws. The necessity of mechanical rigidity will demand the heavy construction described above.

The tube and socket assembly are mounted in the cavity on a center line 5/8" from the center line of the cylinder. Figures 1 (front cover) and 1a are largely self-explanatory as to dimensions. The hole cut in the top wall of the cavity should clear the tube anode on all sides by 3/16". Care should be taken to avoid any sharp edges on this hole to retard arcing.

The plate of the tube is coupled to the top wall of the cavity by use of a fabricated by-pass capacitor. The capacitor is constructed from a 3 7/8" square brass plate with a hole cut in the center which is lined with finger stock to contact the plate of the tube. Again, the edges of this plate should be smooth and free from sharp edges. The capacitor dielectric is 10 mil Teflon. The capacitor plate may be secured to the cavity wall in a number of ways so long as adequate insulation is maintained. The author used a Teflon bushing in each corner.

The tube socket may be any of the Eimac SK-600 series with the built-in screen by-pass capacitor. No chimney is needed, but you must force-ventilate the tube.

Tuning

The cavity is tuned to resonance by a disc-type capacitor across the high-impedance points of the walls as shown in Fig. 1. Adjustment is accomplished by use of a lead screw. The author used finger stock to insure good electrical contact and hold lost motion to a minimum. The edges of the capacitor disc should be smooth and rounded.

Output Coupling

Power is coupled out of the cavity by use of a tuned link as shown in Fig. 1. The link was constructed from 1/16" x 1/8" brass strap and formed and mounted as per the drawing. The output tuning capacitor is a small glass piston trimmer. Any small capacitor with a maximum capacity of about 10 pf. should be satisfactory if the dielectric is of high quality. Do not attempt to use a plastic trimmer here as its losses will prove too great and the device will quickly be ruined.

The grid circuit will be left as a matter of choice to the constructor. The author used a circuit similar to that presented in the ARRL VHF Handbook. It is simple and works well.

No neutralization was employed as the 4CX250 is largely self-neutralizing at 432 Mc. There was some flutter in grid current as the plate was tuned through resonance but no tendency toward instability was apparent.

A few words of caution might be in order. It is advisable, with this type of circuit, to use a half-amp. fuse in series with the B plus line and plate meter. In the event of an arc this will save a plate meter.

You should constantly monitor the screen current and do not, under any circumstances, exceed the manufacturer's ratings. Do not attempt to load this amplifier into a load that is not essentially flat (resistive.) Otherwise there may be arcing, especially around the tuning capacitor, and the life of the final tubes will be shortened due to excessive screen dissipation. The circuit was designed for a 50-ohm load, however a 75-ohm load seems to be perfectly acceptable.

Results

Running at an input of one-half KW, with 1750 volts on the plate and 255 volts on the screen, the plate efficiency was measured to be 63%. At lower plate voltages the efficiency will increase somewhat. At 800 volts the efficiency is 74% with the screen current within limits.

Failure to achieve expected efficiency is probably the result of over coupling to the load. This will be exemplified by a very shallow plate dip and probably screen current of reverse polarity. Generally a decrease in output tuning capacity will remedy this. The author has found by experimentation that maximum efficiency occurs with the output capacitor adjusted so that the screen current is near zero.

One final word of caution: Use good quality coax in coupling from the final. Even RG8/U Polyfoam heats considerably.

Editor's note: If your plate supply should fail or the fuse in the plate circuit should blow while you have excitation applied, screen current could quickly become excessive and ruin the tube unless you use a screen supply that limits maximum screen current. In my rig I use a resistive string from the high voltage with VR tube "catchers" at a voltage above where the screens should run or at about the same level. The VRs limit the maximum voltage that can be applied to the screen and the resistor string to high voltage limits the maximum current that can be drawn and also assures me I have no screen voltage when there is no plate voltage. The VRs are lit only when there is no excitation and therefore no screen current. They are not used to "regulate" screen voltage. Other methods are given in the various handbooks.

*3800 Yaupon Street, Chesapeake, Va. 23703

ACKNOWLEDGEMENTS

I wish to express my sincere thanks to all of you who have contributed articles and information to VHFER in the past. Special thanks go to Victor Michael for his Moonbounce Newsletter series, to our un-paid but very willing helper Marilyn Wiseman for her Open Bands column, Al Olcott, K7ICW. Special thanks also go to Wayne Green, who gave us un-ceasing special help in both getting VHFER going and keeping it going. Editorial staffs of all three major ham magazines and several of the smaller ones have been very kind.

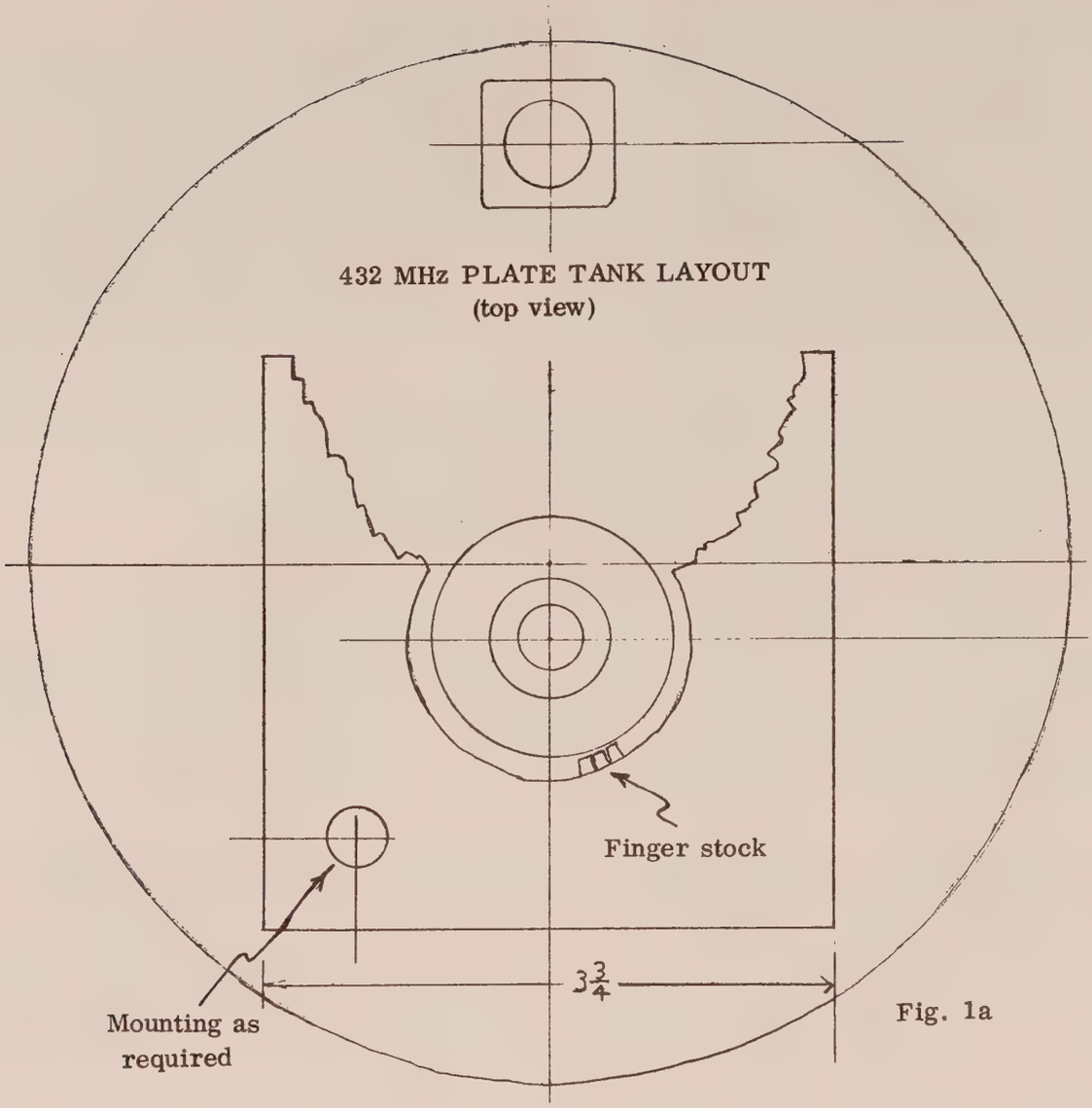

Fig. 1a

PLANAR TRIODE TUBES FOR UHF AMATEUR SERVICE

Robert I. Sutherland, W6UOV

Planar triodes (or lighthouse tubes) are well suited for amateur use in the UHF spectrum. Various surplus versions, such as the 2C40, 446B and 2C39 have been used at frequencies up to 1300 Mc. A new planar triode, the 3CX100A5 is now available for improved service in this frequency region.

The 3CX100A5 is relatively unknown to the amateur fraternity, but its older relative, the 2C39A, has been long a favorite UHF tube of the "surplus hounds." The 3CX100A5 is an improved, modern version of this old World War II tube, dressed up in a brand-new ceramic and metal envelope. This tube, and its twin, the 7289 fit into the amateur picture very nicely as a straight-through amplifier, a doubler, or as a tripler in the frequency range of 1000 to 3000 Mc. In addition, it is not expensive, and various glass versions of the older 2C39/2C39A/2C39WA can often be obtained at give-away prices on the surplus market.

The following data covers grounded grid operation of the 3CX100A5 as a UHF power amplifier and multiplier. Because of the high power gain of the tube, grounded grid circuitry is desirable, since intercoupling between the input and output circuits is reduced to a minimum, and neutralization is not required. This data can be used to estimate the performance of the 2C39 glass family of tubes by noting that the useful power output of this style tube will be somewhat less (depending upon the frequency) by an amount up to 25 percent at 2.5 kMc. as shown on the graphs.

Various 3CX100A5 tubes were run in a coaxial cavity capable of tuning from 1000 Mc. to 3000 Mc. A series of measurements was made using a representative sample of standard production tubes, with the tube under test operating as an amplifier, doubler and tripler. Drive and output power were carefully measured for each test, and appropriate filters were used to eliminate feedthrough and harmonic output and therefore was measured as such. When the tube is operated as a doubler or tripler, the feedthrough power is at the driving frequency and is undesired. In actual use, it is necessary to eliminate this power from the output circuit of any grounded-grid frequency multiplier. High-Q tuned circuits or wave filters will do the job.

A graph of average tube performance is shown in Fig. 2 of the UHF grounded-grid amplifier circuit. Grid drive, grid bias, and plate loading were adjusted to provide maximum power output while maintaining the plate current at 100 ma. Average potentials for tubes tested are indicated on the graph. At 1300 Mc., for example, the 3CX100A5 is capable of a power output of about 47 watts at an efficiency of 47%. The power gain of the tube is 8 decibels, indicating a required drive level of about 7.5 watts as measured at the input of the coaxial fitting to the cavity. Power output gradually decreases as the frequency of operation is raised. At 2400 Mc. power output (at 100 watts input) drops to 25 watts, and grid driving power increases to 10 watts. Power gain at this frequency is 2.5. The comparative curve for the 2C39A tube over the same frequency range is shown by a dotted line on the graph.

The same sample of tubes used in previous tests was used in performing the gain and power output measurements for the doubler configuration. Excitation was applied at half-frequency and the same precautions were followed as in the case of the amplifier. Test conditions were adjusted for maximum power output at a plate current of 100 ma. At 1300 Mc., power output is about 27 watts, with a circuit efficiency of 27%. Power gain is 5.4 decibels. Accordingly, a drive power of about 8 watts is required. At

2400 Mc., power output is 13 watts, with a drive power of about 9 watts. Power gain drops to unity at a frequency of about 2700 Mc. The tube is still useful as a frequency doubler to this frequency, however, as a power output of 10 watts can be obtained. The 2C39A curve is shown as a dotted line on the graph (Fig. 3.)

The same tubes and general test techniques were used to determine the operating parameters of this tube as a frequency tripler. Drive power was applied at one-third output frequency and the circuit was adjusted for maximum power output. At 1300 Mc, 17 watts of power were obtained with about 10 watts driving power. At 2400 Mc., power output was about 8 watts. Driving power was about 12 watts (Fig. 4.)

A complete socket for the 3CX100A5/2C39 tube tube is a rare bird indeed. Most equipment has the tube sockets built directly into r.f. cavities. Collet rings for the tube, however, may be bought from Instrument Specialties Co., Little Falls, N.J. The catalog numbers are: Plate collet, #97-70; grid collet, #97-72; cathode collet, #97-76; filament collet, #97280. The Braun Tool and Instrument Co., 140 5th Avenue, Hawthorne, N.J., can supply the following: Plate collet, #134-53; grid collet, #134-51; cathode collet, #165; filament collet (none). A complete socket assembly may be purchased from Jettron Products, Inc., 56 Route 10, Hanover, N.J.

Conclusions: The planar triode tubes of the 3CX100A5 family perform well in the frequency range encompassing the 1215 Mc. and 2400 Mc. amateur bands. Efficiency is good, considering the frequency of operation. Radio Engineering by F.E. Terman indicates that a doubler will provide about 65% of the power output of a straight-through amplifier, and a frequency tripler will provide about 40% of the power output of the amplifier. These figures agree closely with the data shown herein. A pair of 3CX100A5's should make quite a dent in the 1215 Mc. band. See you on the high end!

Type	Manufacturer	Comment
2C39A	Eimac, Machlett	Glass or ceramic construction
2C39WA	"	"
6897	General Electric	Not interchangeable electrically in most high frequency sockets with 3CX100A5 or 7289
2C41	Machlett	Not interchangeable physically with 3CX100A5 or 7289
381	Eimac, Machlett	3CX100A5 type, rated for pulse service (Eimac-glass or ceramic)
3CX100A5	Eimac, Machlett General Electric	All ceramic construction
7289	Eimac, Machlett, General Electric	Identical to 3CX100A5
3CX100F5	Eimac	Identical to 3CX100A5 except heater voltage is 26.5 volts

Figure 1 - Planar Triode Tubes

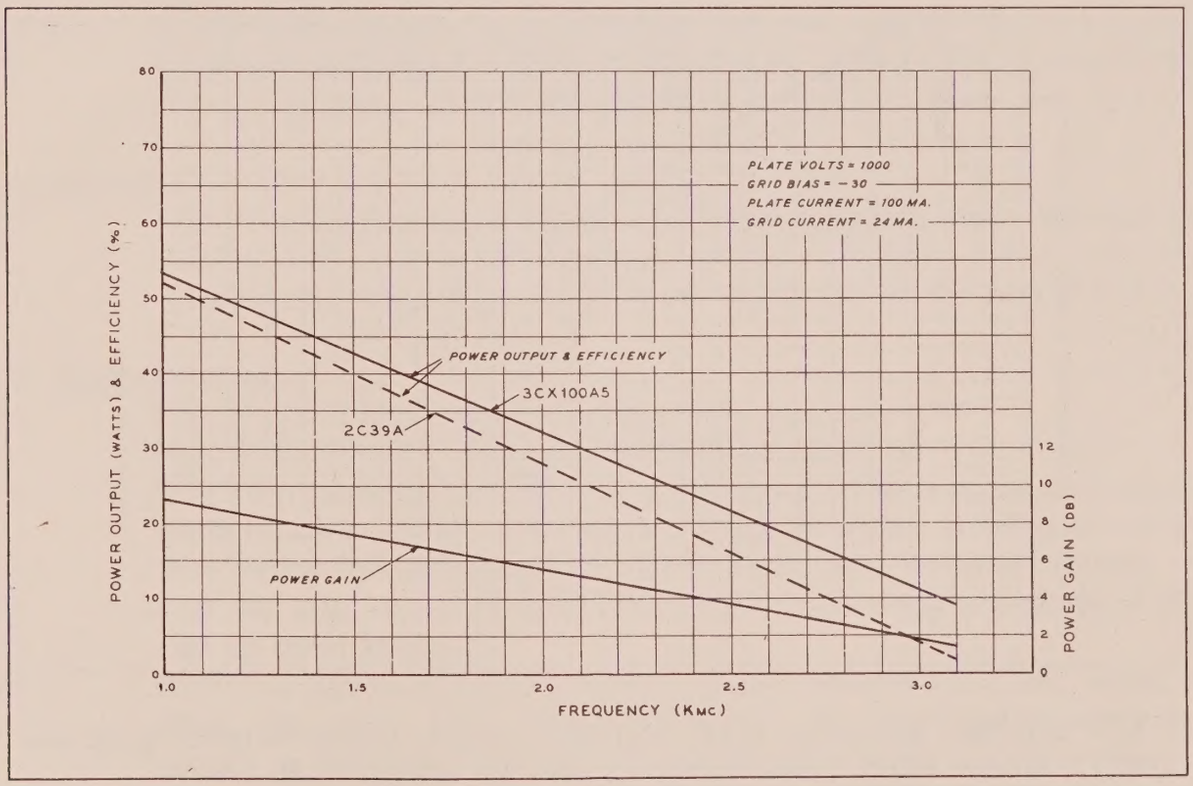

Figure 2. 3CX100A5 grounded grid amplifier; typical power output, gain and efficiency. Glass 2C39A power output shown by dashed line.

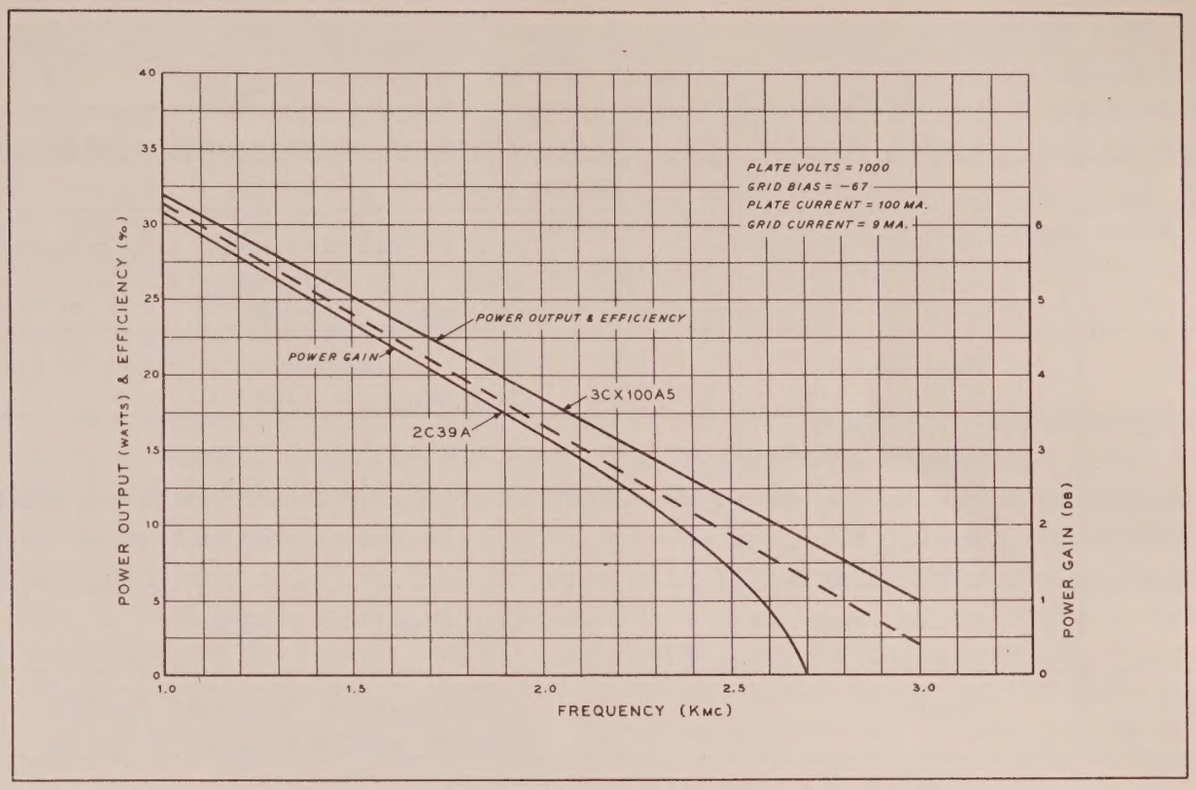

Figure 3. 3CX100A5 grounded grid doubler; typical power output, gain and efficiency. Glass 2C39A power output shown by dashed line.

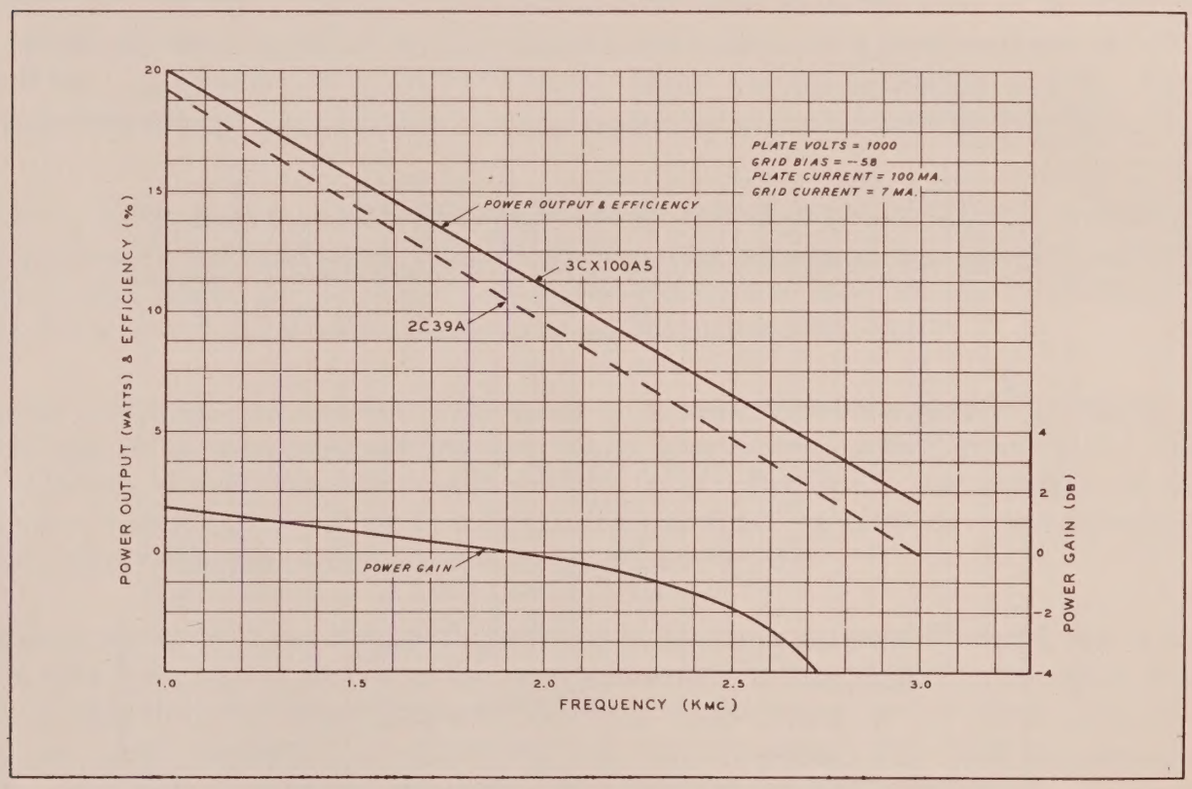

Figure 4. 3CX100A5 grounded grid tripler; typical power output, gain and efficiency. Glass 2C39A power output shown by dashed line.

OPEN BANDS

by Marilyn Wiseman, K8ALO

As the year comes to an end, I'd like to thank all who have sent reports in. Hope next year is as successful. Best Season's greetings and sincere good wishes to you for happiness in the New Year. See you next year. My address: Box 103 Petersburg, Ohio 44454.

50 MHz:

Oct. 7-29	K7ICW (Nev) wrkd WØJXK/7 (Idaho), WA7FJQ, WA7FLB, K7YVS, WA7FPO (Ariz), K7MWC (Wash), plus 7 Calif stations. Hrd W5SFW, W5LHD, WB6NMT, WA6AKM.
Nov. 4-23	K7ICW (Nev.) wrkd WA7CJO, WA7FLB, WA7FPO, K7PRS (Ariz), K6GJD, K6ODV (Calif). Hrd WA7FPU, WA7FJQ, plus 4 Calif. stations.

50 MHz Meteor Scatter:

Oct. 8	K7ICW (Nev) hrd W5LHD (Tex).
Oct. 15	K7ICW (Nev) wrkd WØJXK/7 (Idaho) 700 mi.
Nov. 4	K7ICW (Nev) wrkd K7EBW, K7FRS, WA7CJO, K7PRS (Ariz), WA5EWV, W5LHD (Tex), K6IBY (Calif) hrd W6PUZ/7 (Wash), K5OOJ, K6RIL, K6GJD, WA6RGL.

144 MHz Tropo:

Sept. 20	W1YTW (Me) wrkd VE1AFB (Nova Scotia)
Oct. 1-29	K7ICW (Nev) wrkd W6DQJ, W6YVO, K6IBY (Calif)
Oct. 31	W1YTW (Me) wrkd K4QIF, WB4HIP (Va), W3HB, W3LUL (Md).
Nov. 2-26	K7ICW wrkd K7RKH (Nev), W6DQJ, W6YVO, K6JYO, K6HAA (Calif).
Nov. 25	K5BDQ (Tex) wrkd WA5HVZ, W5ZJO (La), WA5FTN/4, WAØQDP/Mobile (Fla.) 725 mi., K4ZNE, WA4LIP, WA4AZE (Ala) State #6.

144 MHz Aurora:

Sept. 20	W1YTW (Me) wrkd K3CFA, W3BYF (Pa), VE3ASO (Ont), W8FEH (Ohio).
Dec. 1	W8NUB (Ohio) wrkd W2CRS (N.Y.) Also hrd WØNXF (Neb). Jim says the intensity was rather low, but sufficient enough for him to wrk N.Y.

144 MHz Meteor Scatter:

Oct. 20	K7ICW (Nev) wrkd WØLCN (Minn) 1385 mi.
Oct. 21	K7ICW (Nev) wrkd WØLER, WØLCN (Minn) 1385 mi.
Nov. 17	W1YTW (Me) wrkd K4EJQ (Tenn) Frank says this was the only contact made of three skeds. This contact made 34 states for K4EJQ. K7ICW (Nev) wrkd WØLER (Minn). K1HTV (Conn) wrkd WA9DOT (Wisc). WN9UHB (Ill) ran a sked with K1HTV (Conn) but only hrd parts of the call on short bursts.
Nov. 18	WN9UHB (Ill) wrkd K1HTV (Conn). Donna has wrkd Ill, Ind, Iowa, Ky, Mich, Mo, Ohio, Wisc, and Conn so far. She also wants to try moon-bounce on 432 MHz, but will experiment with some back fire arrays on 2 meters.

Note: This may be the first XYL novice to attempt m/s with any success.

Note: It is probable that Open Bands will be continued about as it is in the new magazine. I presume you can still send material to Marilyn. Column continued on the back cover.

432 MHz:

Oct & Nov.	K7ICW (Nev) hrd W6DQJ (Calif) no contact completed.
Nov. 8	W3RUE (Pa) wrkd K2YCO 235 mi.
Nov. 21-23	W3RUE had partical contact with W4FJ (Va) 240 mi.
Nov. 25	W3RUE (Pa) wrkd W4API, W4EXI (Va) 180 mi.
Nov. 27-29	W3RUE (Pa) had partical contact with W4FJ (Va).
Nov. 29	W3RUE (Pa) wrkd W8MNT (Mich) 270 mi.
Nov. 30	W3RUE (Pa) wrkd W4FJ (Va).
Dec. 4	W3RUE (Pa) wrkd KØDOK (Mo) This is first 432 MHz Pa. and Mo. contact. This gives Ted 12 states, 6 areas. He heard KØDOK for about 1 1/2 hrs peaking at 579. Also wrkd W9BRN 325 mi., W8DED 250 mi., W8HUX 270 mi., W8RQI 220 mi.

Skeds Wanted

W1YTW	Frank L. Dennett P.O.Box 102 Kittery, Me. 03904 is interested in 144 MHz skeds for all major showers. Short distance skeds east of Miss. prefered due to low power Xntr 200w into single 4CX250 final. Ant 32 ele colinear. Rcvr 417A conv. into R 4A freq. 144.029 - 144.194 MHz.
K4EJQ	J.G. "Bunky" Botts, Rt 2 Box 72, Bristol, Tenn. 37620 wants 432 MHz skeds with stations in Ga., W.Va., and Ky. Power 100 watts using 10/10 J beam, H.B. transistor ccc ahead of HQ180. Skeds would be from mtn. top QTH on Sun. and Thurs. nights. Bunky says he can meet skeds at most any time and can wrk 144 MHz for back up skeds. Freq. 144.035 - 432.018 CW on 432 MHz.
WN9UHB	Donna Hicks, 12754 Irving St., Blue Island, Ill.60406 wants 144 MHz SSB m/s skeds. Equip. 75w 20A, PH heterodyne unit. Drake R-4 416 B Pre.amp. 6N2 Conv. 100' 'tower with RG 17 A/U coax. 20 ele telerex Long John Freq. 144.008.
K1HTV	Richard Zwirko, 19 Lancer Dr., Thomasonville, Conn.06082 wants 144 MHz skeds for all major showers with stations in Kans., La., N.Dak., Okla., and N.E. Tex. Also SSB skeds with anyone needing conn. 500 w CX250 11/11 yagi 3/4" aluminum cable SB101 6360 mixer CN 144 Nuv. Conv.
W4WQZ	G.R. "Jerry" Lappin, 4047 Skyland Dr., Kingsport, Tenn. 37664 would like m/s or tropo skeds on 144 MHz. Particularly interested in SSB m/s propagation. Xmtr 2 4CX250's 1 KW CW and USB rcvr HB conv. 2 grounded grid 417A into SX117 Ant. 10/10 Skybeams 50'. QTH hill-top 500' above surrounding area. Also interested in 432 MHz skeds. Xmtr. Varactor Tripler 20 W CW output Rcvr HB conv. TIXM05 front end into SX117. Ant. Quad Tilton yagi 45'. Jerry says this should be augmented in the near future with 500W 4CX250 amplifier.

Published by Parks Electronics Lab.
419 S.W. First
Beaverton, Ore. 97005

J.J. O'BRIEN 6-69-1 ④
6606 FIFTH STREET
RIO LINDA, CALIF. 95673

Return Requested